AVTECH ELECTROSYSTEMS LTD.

NANOSECOND WAVEFORM ELECTRONICS
ENGINEERING – MANUFACTURING

P.O. BOX 265
OGDENSBURG
NEW YORK
13669
(315) 472-5270

BOX 5120, STN. "F"
OTTAWA, ONTARIO
CANADA K2C 3H4
TEL: (613) 226-5772
FAX: (613) 226-2802
TELEX: 053-4591

INSTRUCTIONS

MODELS AV-130-UCLA2-PS & AVX-SP-4A-UCLA1

S.N.:

WARRANTY

Avtech Electrosystems Ltd. warrants products of its manufacture to be free from defects in material and workmanship under conditions of normal use. If, within one year after delivery to the original owner, and after prepaid return by the original owner, this Avtech product is found to be defective, Avtech shall at its option repair or replace said defective item. This warranty does not apply to units which have been dissembled, modified or subjected to conditions exceeding the applicable specifications or ratings. This warranty is the extent of the obligation or liability assumed by Avtech with respect to this product and no other warranty or guarantee is either expressed or implied.

4412

AVTECH ELECTROSYSTEMS LTD.

NANOSECOND WAVEFORM ELECTRONICS
ENGINEERING · MANUFACTURING

P.O. BOX 265
OGDENSBURG
NEW YORK
13669
(315) 472.5270

BOX 5120 STN. "F"
OTTAWA, ONTARIO
CANADA K2C 3H4
(613) 226.5772
TELEX 053.4591

Fax No:	2818	Our Fax No:	613-226-2802
To:	UCLA, CA	Your Ref No:	
		Our Ref:	
Attn:	Wim Leemans Tel: 213-825-8453	Date:	June 6, 1990
From:	Avtech Electrosystems Ltd.	Receivers Fax No:	213-206-8220
Subject:	Pulse Amplifier	No. pages faxed:	2

With reference to our telephone conversation of June 5, I am pleased to provide the following price and delivery quotations:

A)

Model designation:	AV-130-UCLA2-PS.
Input amplitude:	-50 to -300 mV.
Input pulse width:	0.5 to 1.0 nsec.
Output amplitude:	+35 volts to 50 ohms.
Output pulse width:	50 nsec.
Propagation delay:	$\leq$ 15 nsec.
Jitter:	$\leq \pm$10 psec.
PRF:	0 to 20 KHz.
Rise time:	$\leq$ 350 psec.
Fall time:	$<$ 2 nsec.
Connectors:	SMA.

Chassis size:	4" x 8" x 12".
Prime power:	120/240V, 50-60 Hz.
Price:	$1,990.00 US each, FOB Destination.
Delivery:	30 days ARO.

Note that the gain element is enclosed in a sealed metal enclosure which is mounted in a metal instrument case. Note also that we cannot provide a threshold control function.

B)

Model designation:	AVX-SP-4A-UCLA1.
Function:	Power splitter accepts input from AV-130-UCLA2-PS and provides 4 15 volt outputs.
Rise time:	$\leq$ 500 psec.
Connectors:	SMA.
Package size:	1.7" x 2.6" x 4.3".
Price:	$724.00 US each, FOB Destination.
Delivery:	30 days ARO.

Thank you for your interest in our products. Please call me again if you require any additional information.

Rgds

Walter J. Chudobiak
Chief Engineer

WJC:pr

RECOMMENDED TEST SET-UP

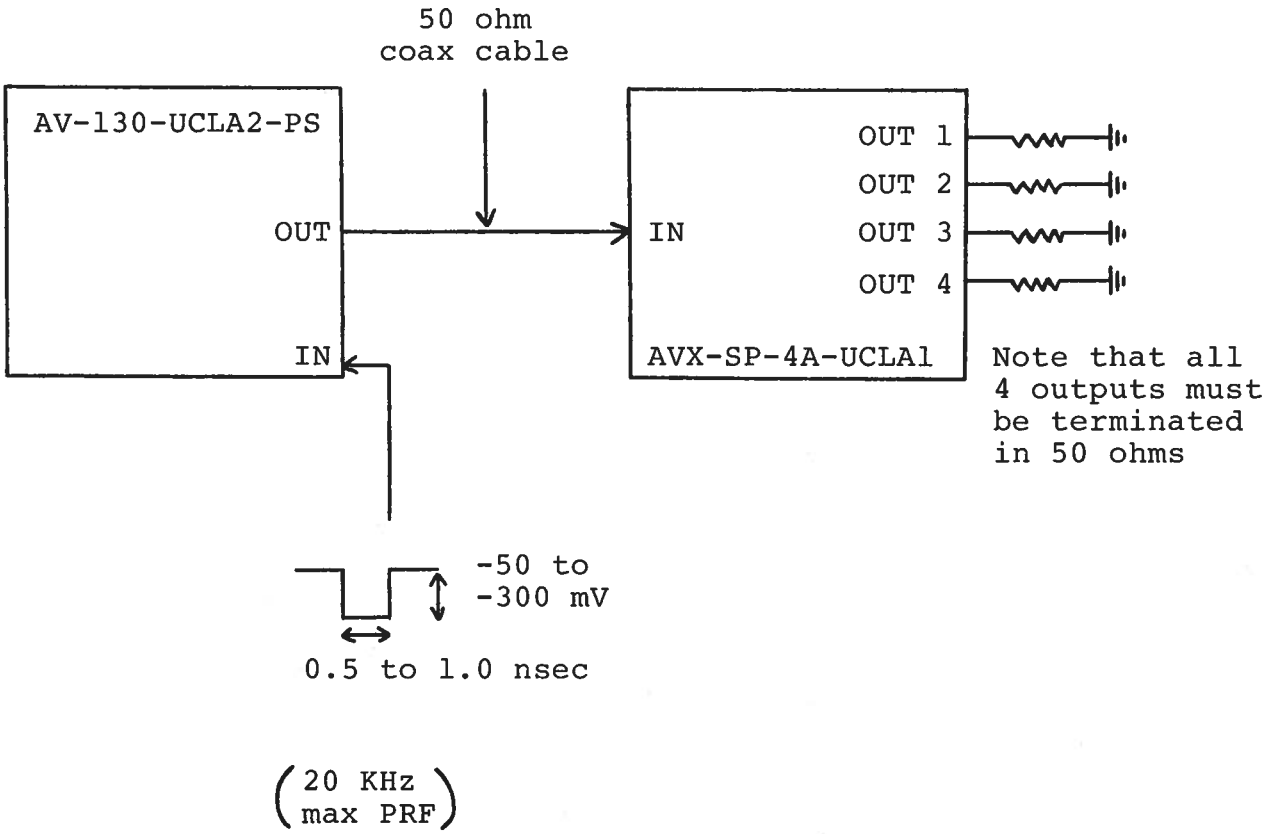

Note that the output amplitude of the AV-130-UCLA2-PS may be increased by about 35% by removing the 3 db attenuator located in the interior of the AV-130-UCLA2-PS chassis. To access the interior, remove the 4 Phillips screws on the rear panel of the instrument and slide the top cover off. Note, however, that with increased output amplitude the AVX-SP-4A-UCLA1 unit will exhibit a much higher output droop.

Schroff 07.24.90

File in Word as of Oct 8/97

File: c:\INSTRUCT\AV-\130UCLA2.DOC

Note: File not adjusted