AVTECH

AVTECH ELECTROSYSTEMS LTD.
NANOSECOND WAVEFORM ELECTRONICS

P.O. BOX 265
OGDENSBURG, NY
U.S.A. 13669-0265
TEL: (315) 472-5270
FAX: (613) 226-2802

BOX 5120 STN. F
OTTAWA, ONTARIO
CANADA K2C 3H4
TEL: (613) 226-5772
FAX: (613) 226-2802

INSTRUCTIONS

MODEL AVM-3-C-P-IBMB PULSE GENERATOR
S.N.: 6533

MODEL AVX-S3A-IBMC-MI BIAS INSERTION UNIT
S.N.: 6535

WARRANTY

Avtech Electrosystems Ltd. warrants products of its manufacture to be free from defects in material and workmanship under conditions of normal use. If, within one year after delivery to the original owner, and after prepaid return by the original owner, this Avtech product is found to be defective, Avtech shall at its option repair or replace said defective item. This warranty does not apply to units which have been dissembled, modified or subjected to conditions exceeding the applicable specifications or ratings. This warranty is the extent of the obligation or liability assumed by Avtech with respect to this product and no other warranty or guarantee is either expressed or implied.

Fig. 1 PULSE GENERATOR TEST ARRANGEMENT

(AVX-S3A MODULE DISCONNECTED)

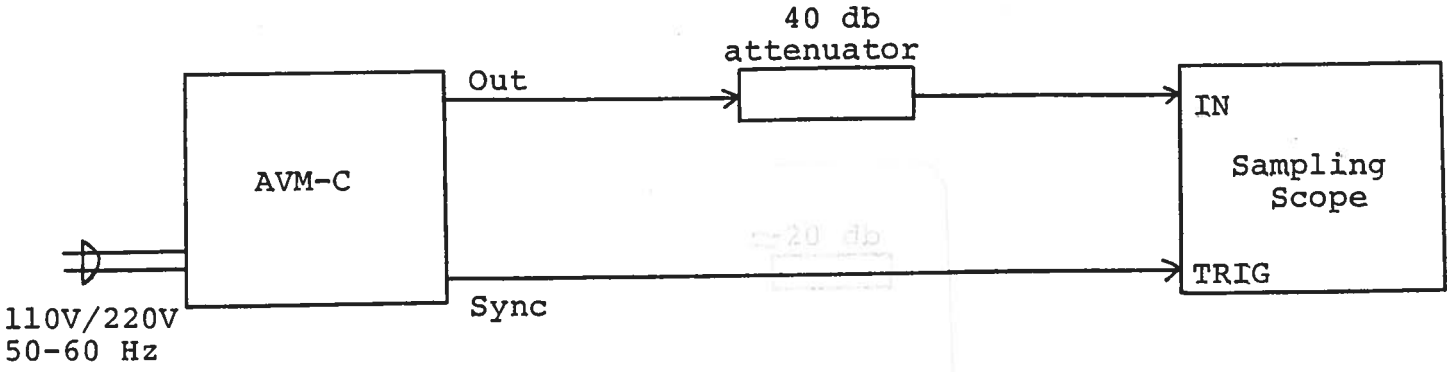

Notes:

1) The bandwidth capability of components and instruments used to display the pulse generator output signal (attenuators, cables, connectors, etc.) should exceed ten gigahertz.

2) The use of 40 db attenuator at the sampling scope vertical input channel will insure a peak input signal to the sampling scope of less than one volt.

3) The sync output channel provides a 0.2 volt 10 nsec pulse.

4) To obtain a stable output display the PRF and PRF FINE controls on the front panel should be set mid-range while the PRF range switch may be in either range. The front panel TRIG toggle switch should be in the INT position. The front panel DELAY control and the scope triggering controls are then adjusted to obtain a stable output. It is recommended that the DELAY control first be set max counter clockwise and then turned clockwise until a stable display is obtained. The scope may then be used to set the desired PRF by rotating the PRF and PRF FINE controls and by means of the PRF range switch. The stability of the display on some sampling scopes is very sensitive to the trigger delay setting, particularly at high PRF (eg. 10 to 20 MHz). If necessary, consult your sample scope instructions manual for the proper triggering method.

5) The output pulse width is controlled by means of the front panel ten turn PW control. The control should initially be set maximum clockwise and the pulse width adjusted using an oscilloscope. Rotation of the PW pot causes the position of the falling edge of the pulse to change.

6) The output pulse amplitude is controlled by means of the front panel ten turn AMP control. The pulse width may change by several nanoseconds as the output amplitude is reduced from maximum to minimum. Therefore it is convenient to first set the desired amplitude and then set the desired pulse width.

7) An external clock may be used to control the output PRF of the AVM unit by setting the front panel TRIG toggle switch in the EXT position and applying a 15 nsec (or wider) TTL level pulse to the TRIG BNC connector input. The AVM unit triggers on the rising edge of the input trigger pulse. For operation in this mode, the scope time base must also be triggered by the external clock rather than from the SYNC output.

8) WARNING: Model AVM-C may fail if triggered at a PRF greater than 20.0 MHz.

9) The Model AVM-C pulse generator can withstand an infinite VSWR on the output port.

10) The AVM-C unit can be converted from 110 to 220V 50-60 Hz operation by adjusting the voltage selector card in the rear panel fused voltage selector-cable connector assembly.

11) RISE TIME-OVERSHOOT CONTROL. Units with a serial number above 4200 include a rear panel one turn pot control which governs rise time and overshoot. Normally, this pot should be fully clockwise. However, at PRF near 20 MHz, the overshoot may be reduced by turning the pot counter-clockwise as required (note that the AVX-S3A unit tends to filter out the overshoot).

12) For additional assistance:

Tel: 1-800-265-6681
Fax: 613-226-2802

Fig. 2 PULSE GENERATOR TEST ARRANGEMENT

(AVX-S3A MODULE CONNECTED)

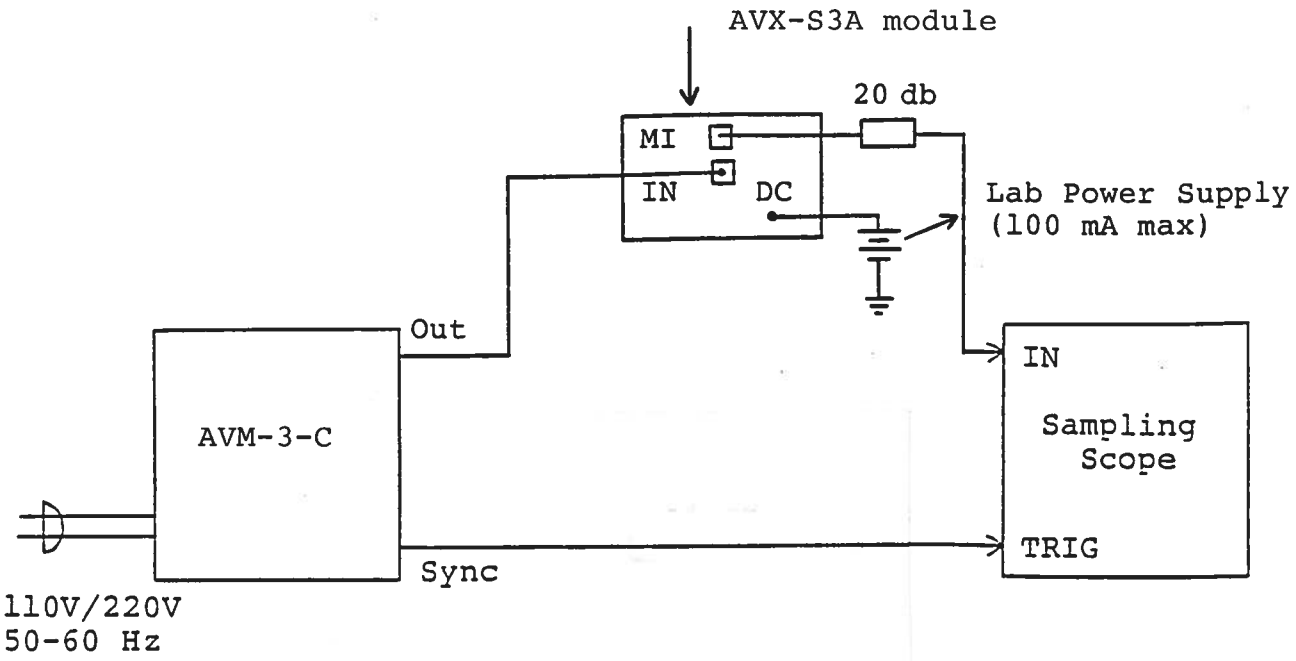

1) A general description of the AVX-S3A module is given in the enclosed data sheet.

2) The AVX-S3A module should be connected to the AVM-3-C mainframe via the supplied 24" RG174 cable. The diode current may be monitored by connecting the MI output port to the sampling scope via a 20 db attenuator. The output amplitude (V_{MI}, volts) and diode current (I_D, Amp) are related as follows:

$$I_D = V_{MI}$$

3) The laser diode plugs directly into the socket on the side of the AVX-S3A module.

4) A forward DC bias may be applied to the laser diode by connecting a DC potential of 0 to +5 Volts to the DC solder terminal. The application of a small forward bias often yields a more ideal diode current waveform (as observed on the MI port). Note that the DC port must be shorted to ground if a bias is not applied.

MX-53A-IBMC-MI SN 6535

DEC 92

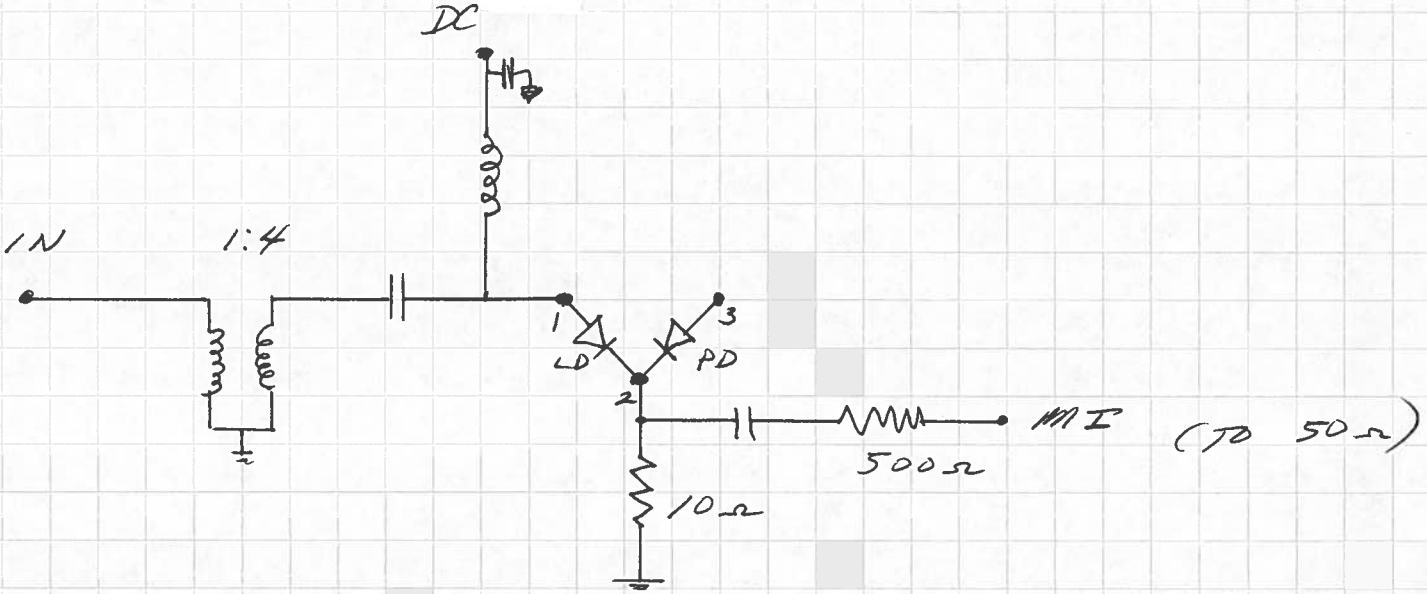

FUNCTIONAL EQUIV CKT

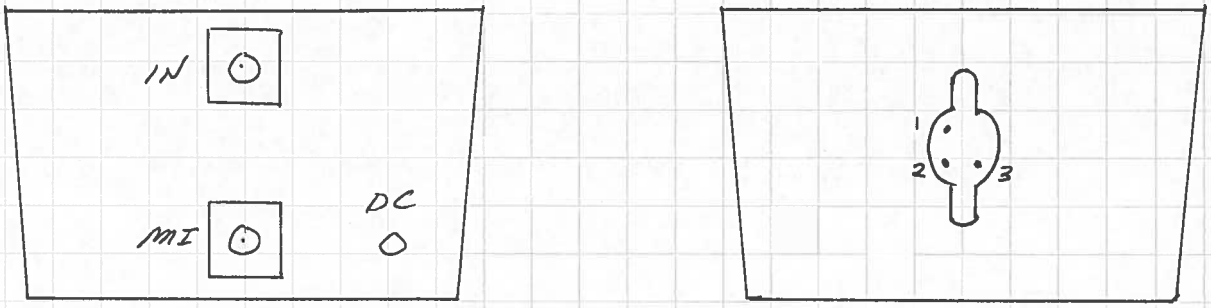

PACKAGE

Fig. 2 FRONT PANEL CONTROLS

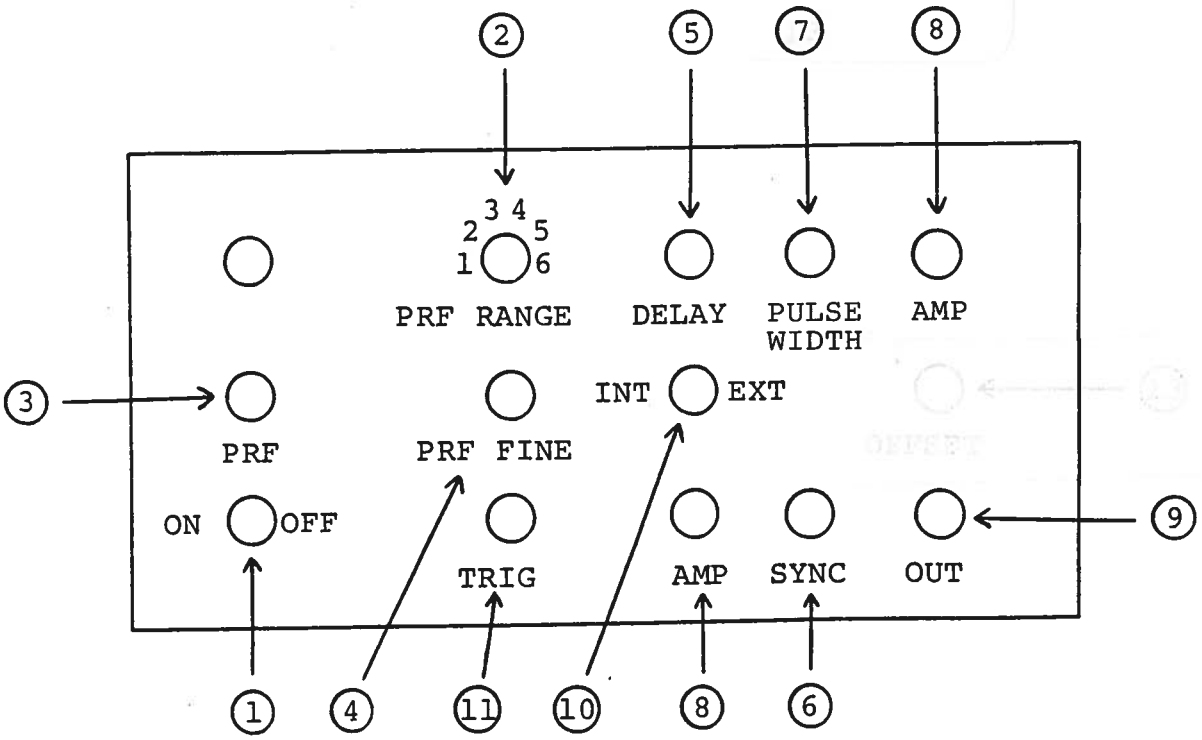

(1) ON-OFF Switch. Applies basic prime power to all stages.

(2) PRF Control. PRF RANGE, PRF and PRF FINE controls
(3) determine output PRF as follows:
(4)

	PRF MIN	PRF MAX
Range 1	1-2 kHz	7 kHz
Range 2	7 kHz	35 kHz
Range 3	35 kHz	160 kHz
Range 4	160 kHz	0.8 MHz
Range 5	0.8 MHz	4.0 MHz
Range 6	4.0 MHz	20 MHz

(4) PRF FINE Control. This control varies PRF but is about 10 times less sensitive than the main PRF control.

(5) DELAY Control. Controls the relative delay between the reference output pulse provided at the SYNC output (6) and the main output (9). This delay is variable over the range of 0 to at least 100 ns.

(6) SYNC Output. This output precedes the main output (9) and is used to trigger the sampling scope time base. The output is a 200 mV 10 nsec (approx) pulse capable of driving a fifty ohm load.

(7) PW Control. A ten turn control which varies the output pulse width.

(8) AMP Control. A ten turn control which varies the output pulse amplitude from 0 to max output to a fifty ohm load.

(9) OUT Connector. SMA connector provides output to a fifty ohm load.

(10) EXT-INT Control. With this toggle switch in the INT position, the PRF of the AVM unit is controlled via an internal clock which in turn is controlled by the PRF and PRF FINE controls. With the toggle switch in the EXT position, the AVM unit requires a 15 nsec (or wider) TTL level pulse applied at the TRIG input in order to trigger the output stages. In addition, in this mode, the scope time base must be triggered by the external trigger source.

(11) TRIG Input. The external trigger signal is applied at this input when the EXT-INT toggle switch is in the EXT position.

Fig. 3

BACK PANEL CONTROLS

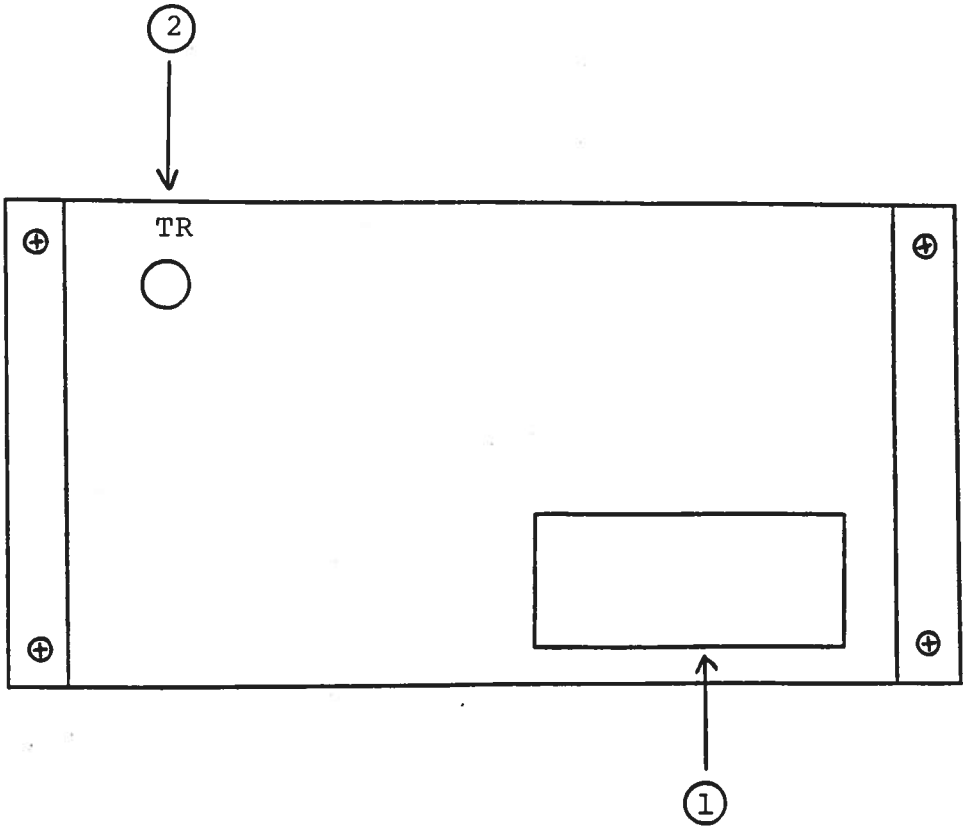

(1) FUSED CONNECTOR, VOLTAGE SELECTOR. The detachable power cord is connected at this point. In addition, the removable cord is adjusted to select the desired input operating voltage. The unit also contains the main power fuse (0.25 Amp).

(2) RISE TIME-OVERSHOOT CONTROL. Units with a serial number above 4200 include a rear panel one turn pot control which governs rise time and overshoot. Normally, this pot should be fully clockwise. However, at PRF near 20 MHz, the overshoot may be reduced by turning the pot counter-clockwise as required (note that the AVX-S3A unit tends to filter out the overshoot).

Fig. 4 SYSTEM BLOCK DIAGRAM

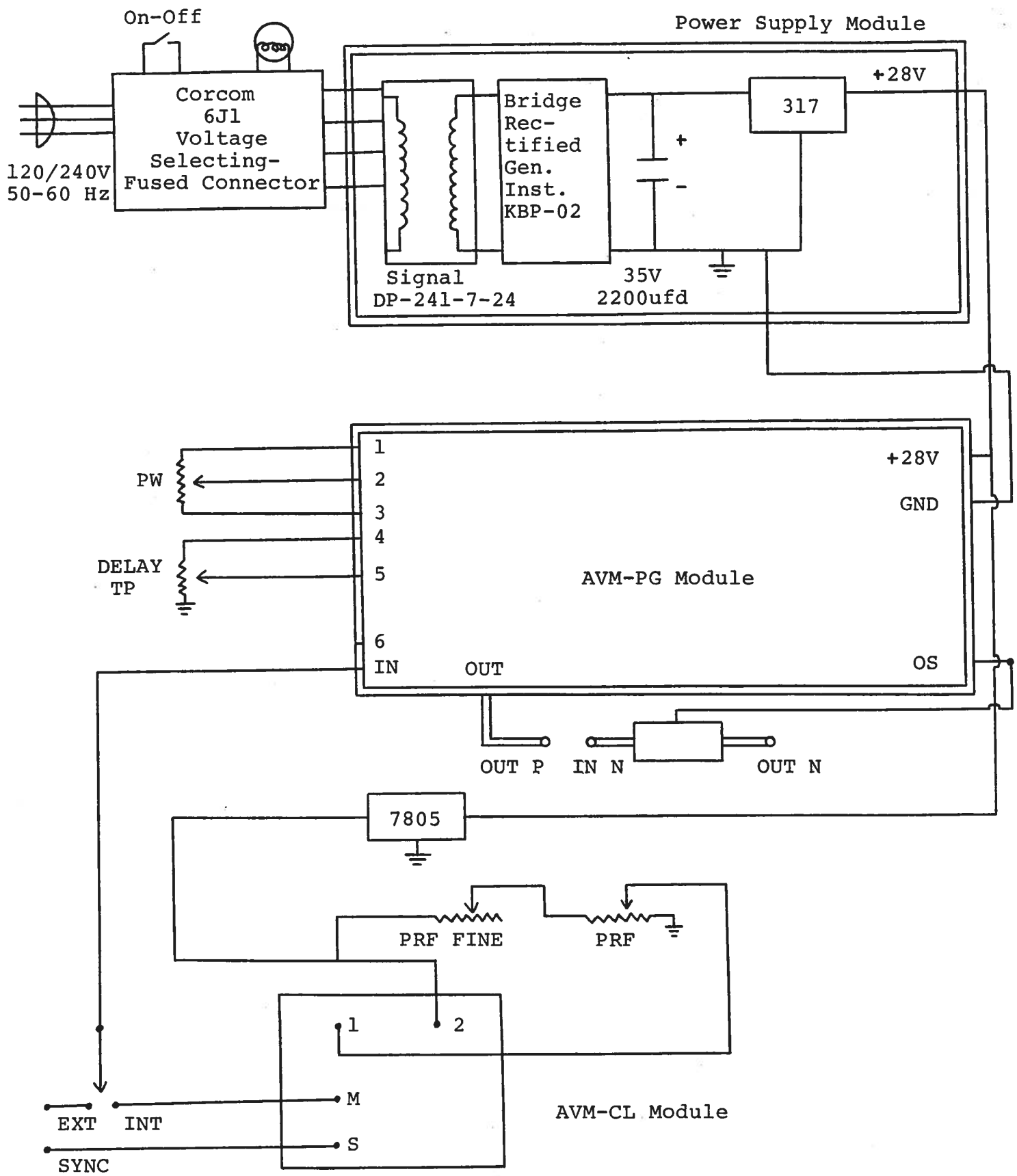

SYSTEM DESCRIPTION AND REPAIR PROCEDURE

The AVM-C consists of a pulse generator module (AVM-PG), a clock module (AVM-CL) and a power supply board which supplies +28 volts (600 mA max) to the pulse generator module. In the event that the unit malfunctions, remove the instrument cover by removing the four Phillips screws on the back panel of the unit. The top cover may then be slid off. Measure the voltage at the +28 V pin of the PG module. If this voltage is substantially less than +28 volts, unsolder the line connecting the power supply and PG modules and connect 100 ohm 10 W load to the PS output. The voltage across this load should be about +28 V DC. If this voltage is substantially less than 28 volts the PS module is defective and should be repaired or replaced. If the voltage across the resistor is near 28 volts, then the PG module should be replaced or repaired. The sealed PG module must be returned to Avtech for repair (or replacement). The clock module provides a 20 nsec TTL level trigger pulse at pin M to trigger the PG module and a 20 nsec 0.5 V sync pulse at pin S to trigger the sampling scope display device. The output at pin S precedes the output at pin M by 0 to 100 nsec depending on the DELAY control setting. The clock module is powered by +5.0V supplied by the PG module (from pin 7 to pin 2). With the INT-EXT switch in the EXT position, the clock module is disconnected from the PG module. The clock module is functioning properly if:

a) 20 ns outputs are observed at pins M and S.

b) The PRF of the outputs can be varied over the range of 1.0 kHz to 20 MHz using the PRF, PRF FINE and PRF RANGE controls.

c) The relative delay between the pin M and S outputs can be varied by at least 100 ns by the DELAY control.

The sealed clock module must be returned to Avtech for repair or replacement if the above conditions are not observed.

02.01.93