AVTECH ELECTROSYSTEMS LTD.
NANOSECOND WAVEFORM ELECTRONICS

☐ P.O. BOX 265
OGDENSBURG, NY
U.S.A. 13669-0265
TEL: (315) 472-5270
FAX: (613) 226-2802

☒ BOX 5120 STN. F
OTTAWA, ONTARIO
CANADA K2C 3H4
TEL: (613) 226-5772
FAX: (613) 226-2802

INSTRUCTIONS

MODEL AVMR-2-PN-C-EA-EW-M4 PULSE GENERATOR

S.N.:

WARRANTY

Avtech Electrosystems Ltd. warrants products of its manufacture to be free from defects in material and workmanship under conditions of normal use. If, within one year after delivery to the original owner, and after prepaid return by the original owner, this Avtech product is found to be defective, Avtech shall at its option repair or replace said defective item. This warranty does not apply to units which have been dissembled, modified or subjected to conditions exceeding the applicable specifications or ratings. This warranty is the extent of the obligation or liability assumed by Avtech with respect to this product and no other warranty or guarantee is either expressed or implied.

Fig. 1 PULSE GENERATOR TEST ARRANGEMENT

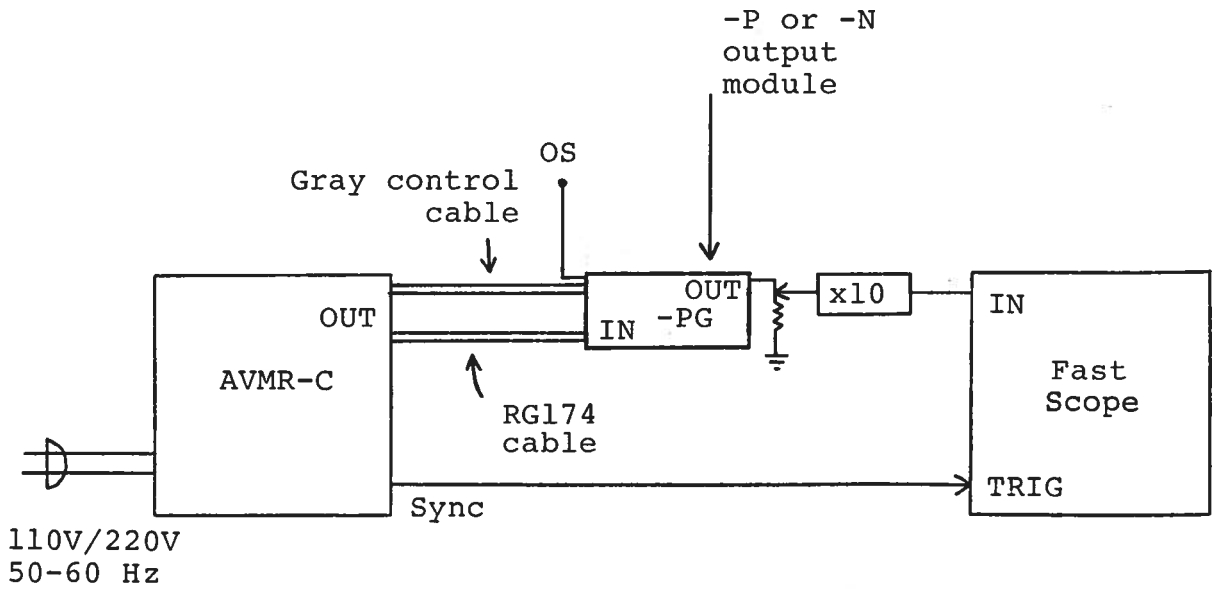

Notes:

1) The bandwidth capability of components and instruments used to display the pulse generator output signal (attenuators, cables, connectors, etc.) should exceed 200 MHz.

2) The -PG-P or -PG-N output module should be connected to the mainframe via the grey control cable and the black RG174 cable. The load resistance should be connected to the PG OUT port using less than several inches of 50 Ohm cable. A DC offset may be applied to the load by applying the desired DC potential to the OS terminal. Do not exceed ±250 mA or ±50 Volts.

3) The sync output channel provides a +0.5 V pulse.

4) To obtain a stable output display the PRF controls on the front panel should be set mid-range while the PRF range switch may be in either range. The front panel TRIG toggle switch should be in the INT position. The front panel DELAY control and the scope triggering controls are then adjusted to obtain a stable output. It is recommended that the DELAY control first be set max counter clockwise and then turned clockwise until a stable display is obtained. The scope may then be used to set the desired PRF by rotating the PRF and PRF FINE controls and by means of the PRF range switch. CAUTION: Do not exceed a 20% duty cycle.

5) The output pulse width is controlled by means of the front panel one turn PW control. The control should initially be set maximum counter clockwise and the pulse width adjusted using an oscilloscope. CAUTION: Do not exceed the 20% duty rating as follows:

PRF	PW MAX
1.0 MHz	200 ns
2.0 MHz	100 ns
4.0 MHz	50 ns
5.0 MHz	40 ns
10.0 MHz	20 ns

6) To voltage control the output pulse width, set the rear panel switch in the EXT position and apply 0 to +10V to connector A ($R_{IN} \geqslant 10K$). (EW option).

7) The output pulse amplitude is controlled by means of the front panel one turn AMP control.

8) To voltage control the output amplitude, set the rear panel switch in the EXT position and apply 0 to +10V to connector A ($R_{IN} \geqslant 10K$). (EA option).

9) To DC offset the output pulse connect a DC power supply set to required DC offset value to the back panel terminals on the -PG module marked O.S. The maximum attainable DC offset is ±50 Volts, ±250 mA.

10) An external clock may be used to control the output PRF of the AVMR unit by setting the front panel TRIG toggle switch in the EXT position and applying a 50 nsec, or under, TTL level pulse to the TRIG BNC connector input. For operation in this mode, the scope time base must also be triggered by the external clock rather than from the SYNC output.

11) WARNING: Model AVMR-C may fail if triggered at a PRF greater than 10.0 MHz or at a duty cycle exceeding 20%.

12) Units with a serial number higher than 5600 are protected by an automatic overload protective circuit which controls the front panel overload light. If the unit is overloaded (by operating at an exceedingly high duty cycle or by operating into a short circuit), the protective circuit will turn the output of the instrument OFF and turn the indicator light ON. The light will stay ON (i.e. output OFF) for about 5 seconds after which the instrument will attempt to turn ON (i.e. light OFF) for about 1 second. If the overload condition persists, the instrument will turn OFF again (i.e. light ON) for another 5 seconds. If the overload condition has been removed, the instrument will turn on and resume normal operation. Overload conditions may be removed by:

    1) Reducing PRF (i.e. switch to a lower range)
    2) Reducing pulse width (i.e. switch to a lower range)
    3) Removing output load short circuit (if any)

13) Dual Polarity Option. To obtain a positive output, connect the -PG-P module to the OUT terminals of the mainframe. To obtain a negative output, connect the -PG -N module instead.

14) The AVMR-C unit can be converted from 110 to 220V 50-60 Hz operation by adjusting the voltage selector card in the rear panel fused voltage selector-cable connector assembly.

15) For additional assistance:

Tel: (613) 226-5772
Fax: (613) 226-2802

Fig. 2 FRONT PANEL CONTROLS

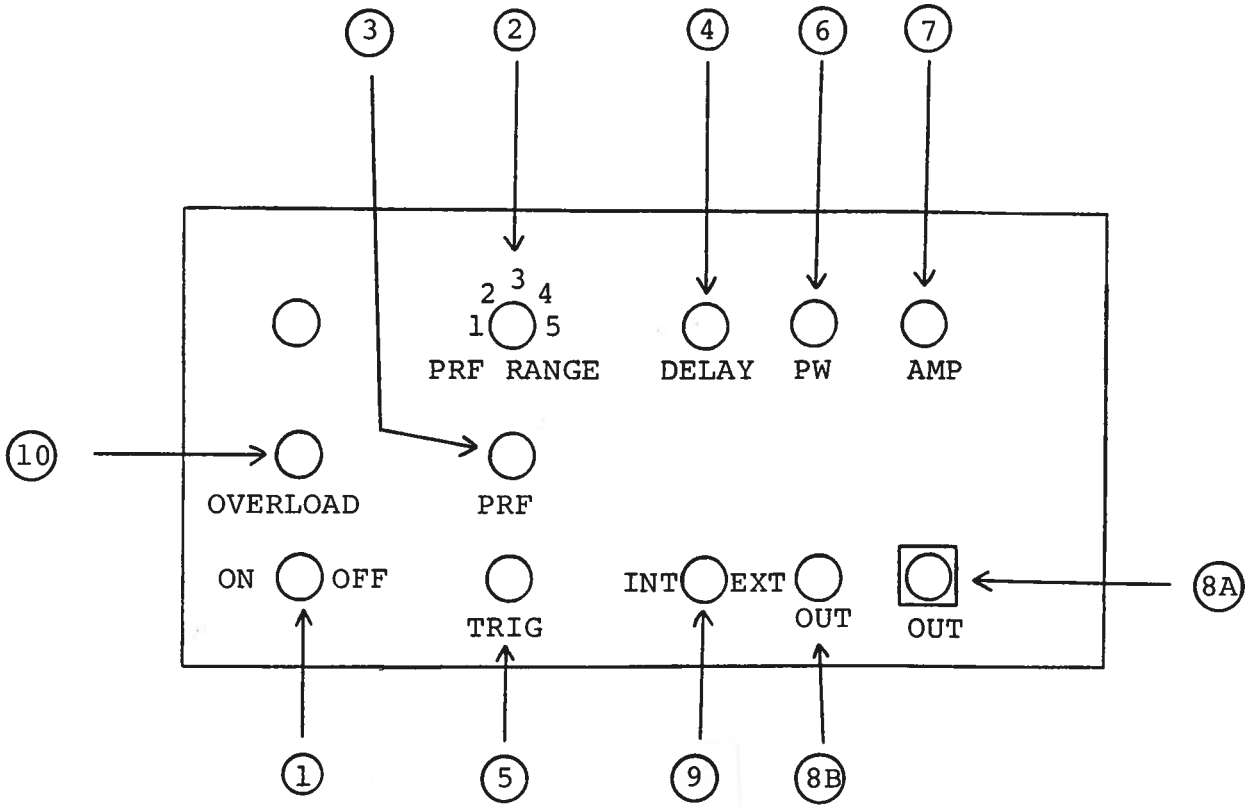

(1) ON-OFF Switch. Applies basic prime power to all stages.

(2) PRF Control. PRF RANGE, PRF and PRF FINE controls
(3) determine output PRF as follows:

	PRF MIN	PRF MAX
Range 1	200 Hz	2 kHz
Range 2	2 kHz	22 kHz
Range 3	22 kHz	220 kHz
Range 4	180 kHz	1.8 MHz
Range 5	1.2 MHz	10 MHz

(4) DELAY Control. Controls the relative delay between the reference output pulse provided at the SYNC output (6) and the main output (9). This delay is variable over the range of 0 to at least 100 ns.

(5) TRIG Output. This output precedes the main output (9) and is used to trigger the sampling scope time base. The output is a +0.5V 20 ns (approx) pulse capable of driving a fifty ohm load.

(6) PW Control. A one turn control which varies the output pulse width.

(7) AMP Control. A one turn control which varies the output pulse amplitude from 0 to max output to a fifty ohm load.

(8A) OUT Connector. SMA connector for RG174 cable to output module.

(8B) OUT Connector. 5 pin connector for grey control cable to output module.

(9) EXT-INT Control. With this toggle switch in the INT position, the PRF of the AVM unit is controlled via an internal clock which in turn is controlled by the PRF and PRF FINE controls. With the toggle switch in the EXT position, the AVM unit requires a 50 nsec (or under) TTL level pulse applied at the TRIG input in order to trigger the output stages. In addition, in this mode, the scope time base must be triggered by the external trigger source.

(10) Units with a serial number higher than 5600 are protected by an automatic overload protective circuit which controls the front panel overload light. If the unit is overloaded (by operating at an exceedingly high duty cycle or by operating into a short circuit), the protective circuit will turn the output of the

instrument OFF and turn the indicator light ON. The light will stay ON (i.e. output OFF) for about 5 seconds after which the instrument will attempt to turn ON (i.e. light OFF) for about 1 second. If the overload condition persists, the instrument will turn OFF again (i.e. light ON) for another 5 seconds. If the overload condition has been removed, the instrument will turn on and resume normal operation. Overload conditions may be removed by:

1) Reducing PRF (i.e. switch to a lower range)
2) Reducing pulse width (i.e. switch to a lower range)
3) Removing output load short circuit (if any)

Fig. 4

BACK PANEL CONTROLS

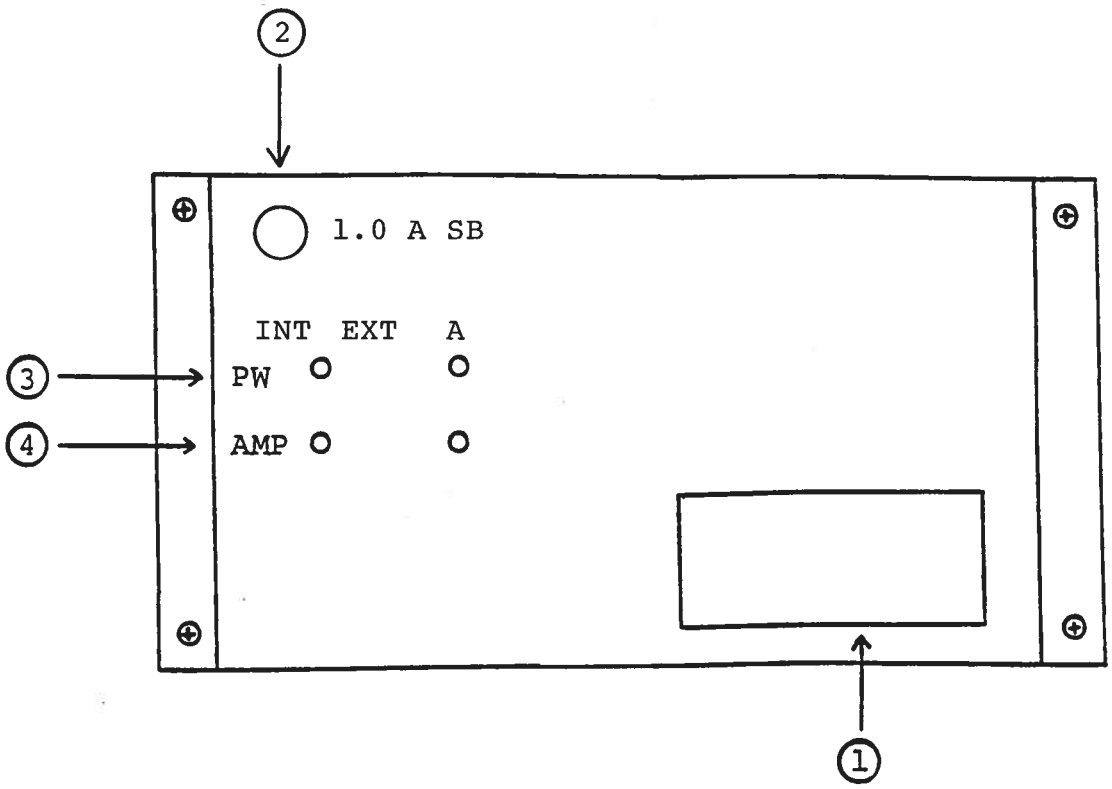

(1) FUSED CONNECTOR, VOLTAGE SELECTOR. The detachable power cord is connected at this point. In addition, the removable cord is adjusted to select the desired input operating voltage. The unit also contains the main power fuse (0.25 A SB).

(2) 1.0 A SB. Fuse which protects output stage against overload conditions.

(3) To voltage control the output pulse width, set the switch in the EXT position and apply 0 to +10V to connector A ($R_{IN} \geqslant 10K$). (EW option).

(4) To voltage control the output amplitude, set the switch in the EXT position and apply 0 to +10V to connector A ($R_{IN} \geqslant 10K$). (EA option).

Fig. 4 SYSTEM BLOCK DIAGRAM

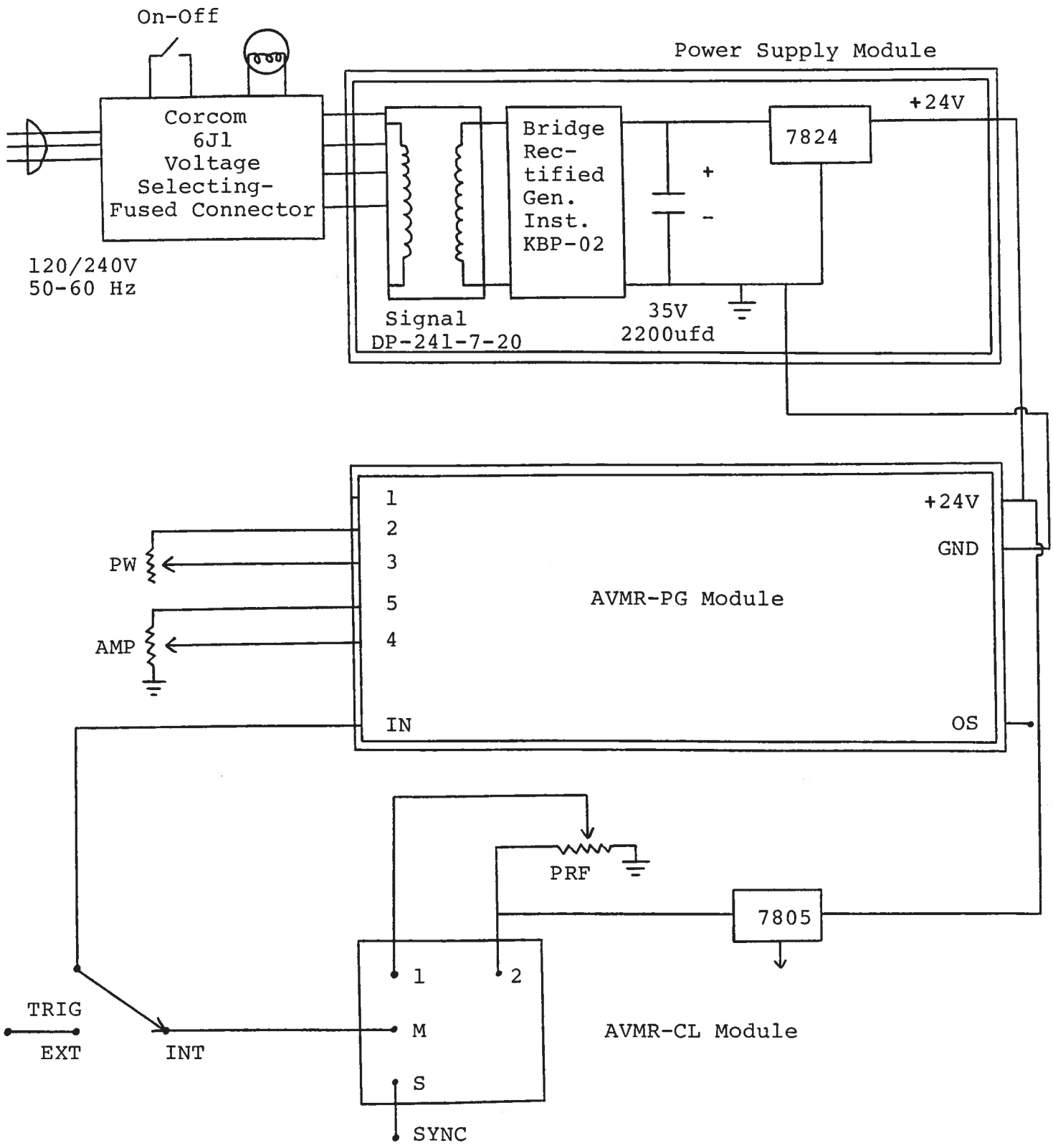

SYSTEM DESCRIPTION AND REPAIR PROCEDURE

The AVMR-2-C-PN-M4 unit consists of the following basic modules:

1) AVMR-2-PG pulse generator modules (P and N)
2) AVMR-2 clock module
3) +24V power supply board
4) AVMR-2 overload module

The modules are interconnected as shown in Fig. 4.

In the event of an instrument malfunction, it is most likely that the 1.0A slow blow fuse or the main power fuse on the rear panel has blown. Replace if necessary. If the unit still does not function, it is most likely that some of the output switching elements (SL5T) may have failed due to an output short circuit condition or to a high duty cycle condition. The switching elements may be accessed by removing the cover plate on the bottom side of the -PG module. The cover plate is removed by removing the four counter sunk 6-32 Phillips screws. NOTE: First turn off the prime power. CAUTION: Briefly ground the SL5T tabs to discharge the 10 volts power supply potential. The elements may be removed from their sockets by means of a needle nosed pliers after removing the four counter sunk 2-56 Phillips screws which attach the small aluminum heat sinks to the body of the -PG module. The SL5T is a selected VMOS power transistor in a TO 220 package and may be checked on a curve tracer. If defective, replacement units should be ordered directly from Avtech. When replacing the SL5T switching elements, take care to insure that the short lead (of the three leads) is adjacent to the back of the chassis. (See following Fig.). The SL5T elements are electrically isolated from the small aluminum heat sinks but are bonded to the heat sinks using WAKEFIELD TYPE 155 HEAT SINK ADHESIVE. If the switching elements are not defective, then the four Phillips screws on the back panel should be removed. The top cover may then be slid off and the operation of the clock and power supply modules checked. The clock module is functioning properly if:

a) 0.1 usec TTL level outputs are observed at pins 2 and 3.
b) The PRF of the outputs can be varied over the range of 200 Hz to 10 MHz using the PRF controls.
c) The relative delay between the pin 2 and 3 outputs can be varied by at least 100 ns by the DELAY control.

The sealed clock module must be returned to Avtech for repair or replacement if the above conditions are not observed.

AVMR-C SL5T HEAT SINKING

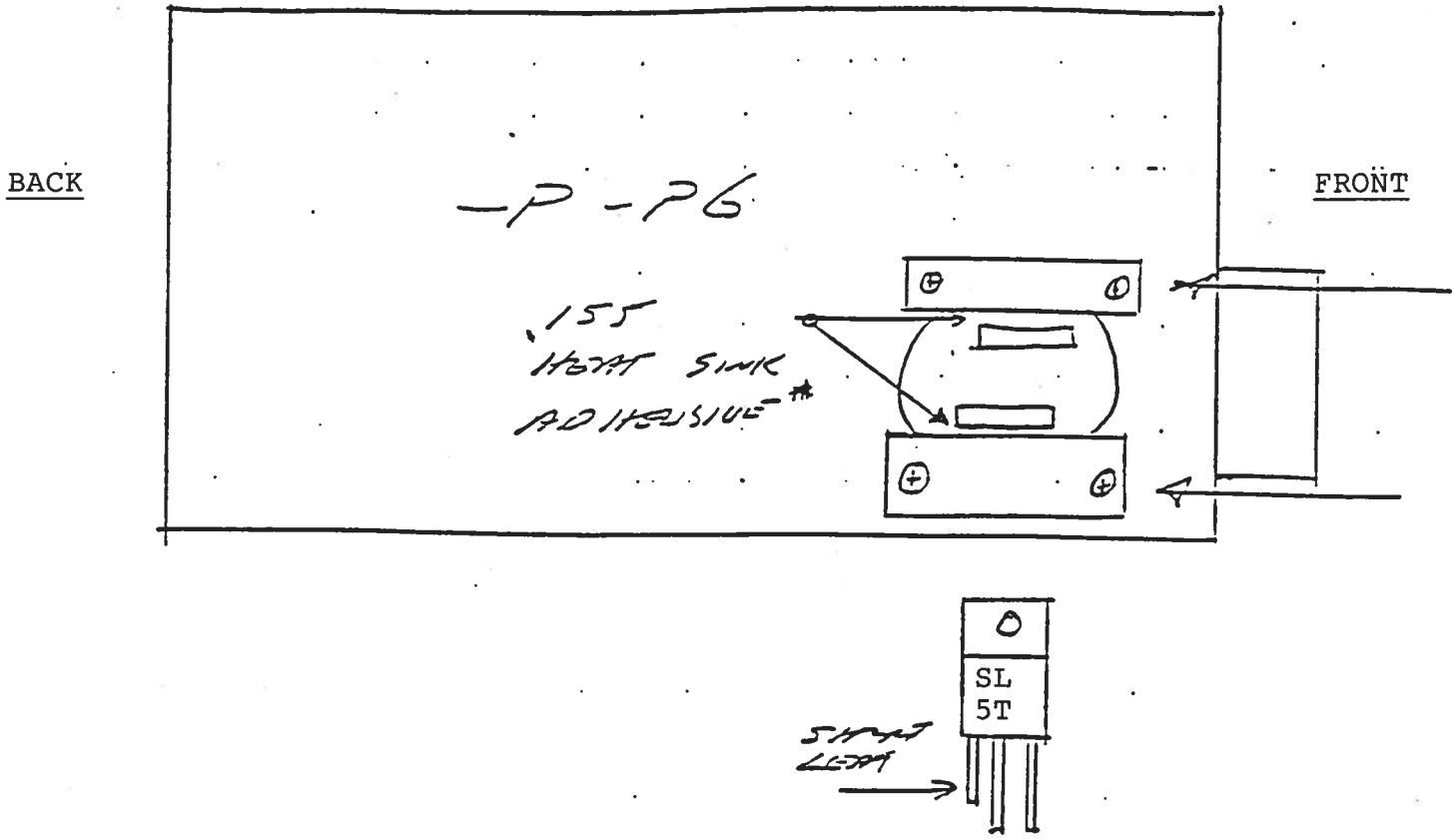

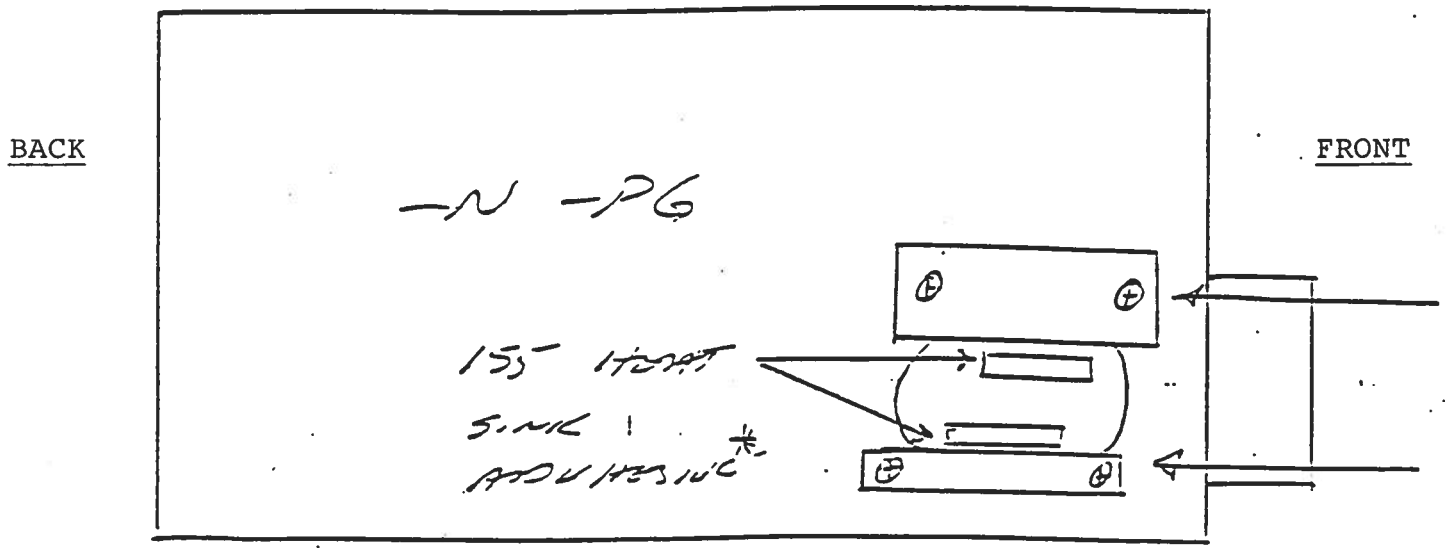

*CAUTION: INSURE THAT TABS OF SL5T DO NOT CONTACT H.S. BARS

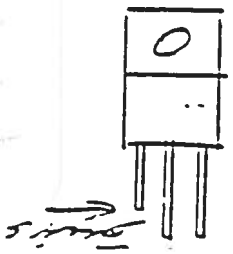

02.26.93

-EW

-EA