AVTECH ELECTROSYSTEMS LTD.
NANOSECOND WAVEFORM ELECTRONICS

P.O. BOX 265
OGDENSBURG, NY
U.S.A. 13669-0265
TEL: (315) 472-5270
FAX: (613) 226-2802

BOX 5120 STN. F
OTTAWA, ONTARIO
CANADA K2C 3H4
TEL: (613) 226-5772
FAX: (613) 226-2802

INSTRUCTIONS

MODEL AVR-3-PS-PN-SRIA PULSE GENERATOR

S.N.:

WARRANTY

Avtech Electrosystems Ltd. warrants products of its manufacture to be free from defects in material and workmanship under conditions of normal use. If, within one year after delivery to the original owner, and after prepaid return by the original owner, this Avtech product is found to be defective, Avtech shall at its option repair or replace said defective item. This warranty does not apply to units which have been dissembled, modified or subjected to conditions exceeding the applicable specifications or ratings. This warranty is the extent of the obligation or liability assumed by Avtech with respect to this product and no other warranty or guarantee is either expressed or implied.

A. TEST ARRANGEMENT

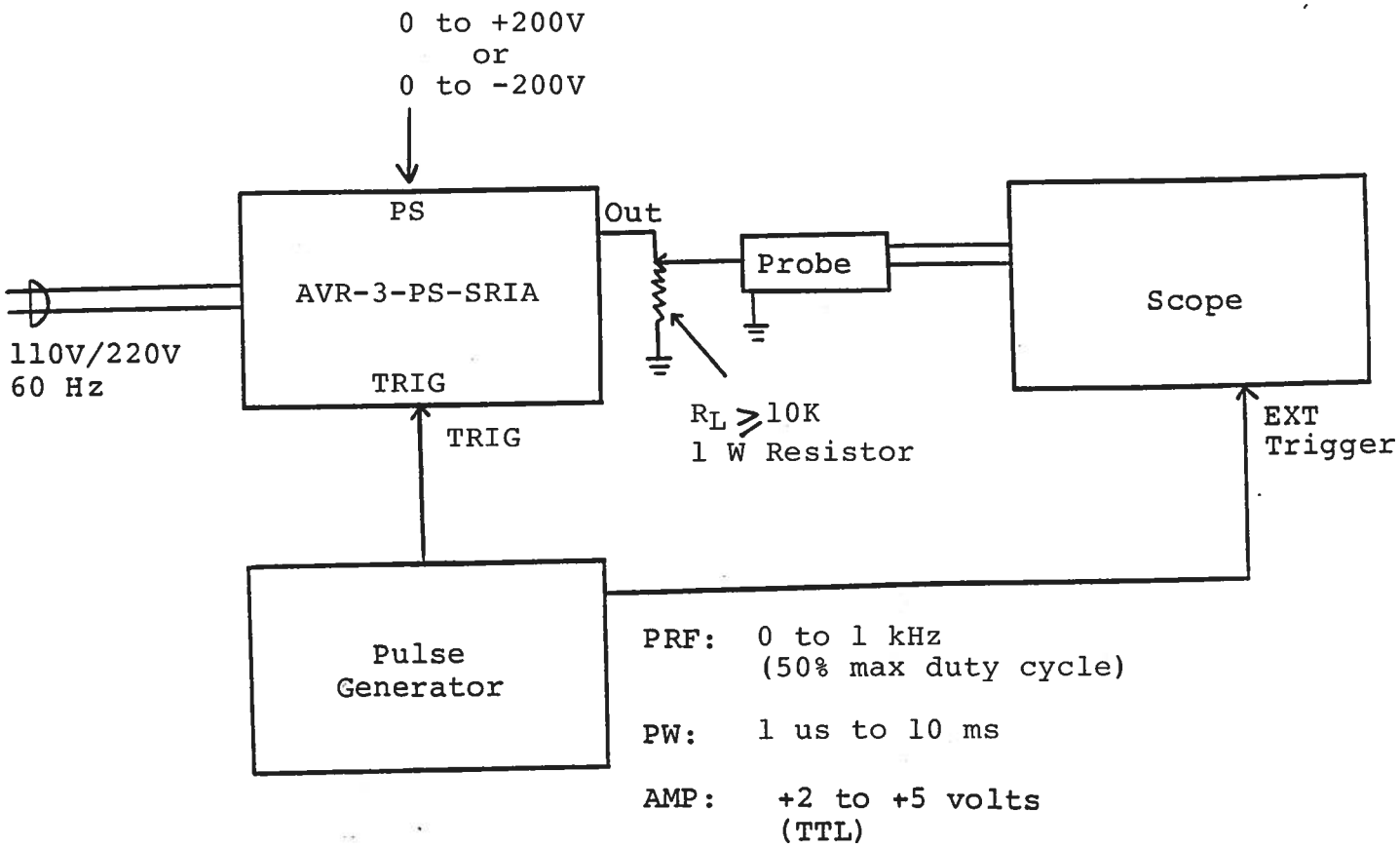

GENERAL OPERATING INSTRUCTIONS

1) The equipment should be connected in the general fashion shown above. Since the AVR unit provides an output pulse rise time as low as 10 ns a fast oscilloscope (at least 50 MHz and preferably 200 MHz) should be used to display the waveform.

2) The output PRF is equal to the input trigger pulse PRF.

3) The output pulse width is equal to the input trigger pulse width.

4) The output pulse amplitude is approximately equal to the DC voltage applied to the PS BNC. Note that if a NEGATIVE (POSITIVE) output pulse is required, the front panel polarity switch must be in the NEGATIVE (POSITIVE) position and the polarity of the voltage applied to the BNC terminal must be NEGATIVE (POSITIVE).

   CAUTION:

   1) The magnitude of the potential applied to the BNC terminal must not exceed 210 Volts. Both the DC power supply and AVR unit may be damaged if this limit is exceeded.

   2) The instrument may be damaged if the load resistance and duty cycle are such that the supply current at the PS BNC terminals exceeds 200 mA.

5) CAUTION: The maximum PRF, PW or duty cycle conditions must not be exceeded. Under simultaneous conditions of wide pulse width, high PRF and high load current, the output stage may be damaged. The output switching elements can be replaced following the procedure given below.

6) The AVR unit can be converted from 110 to 220V 50-60 Hz operation by adjusting the voltage selector card in the rear panel fused voltage selector-cable connector assembly.

7) For additional assistance:

   Tel: (613) 226-5772
   Fax: (613) 226-2802

C. POWER SUPPLY

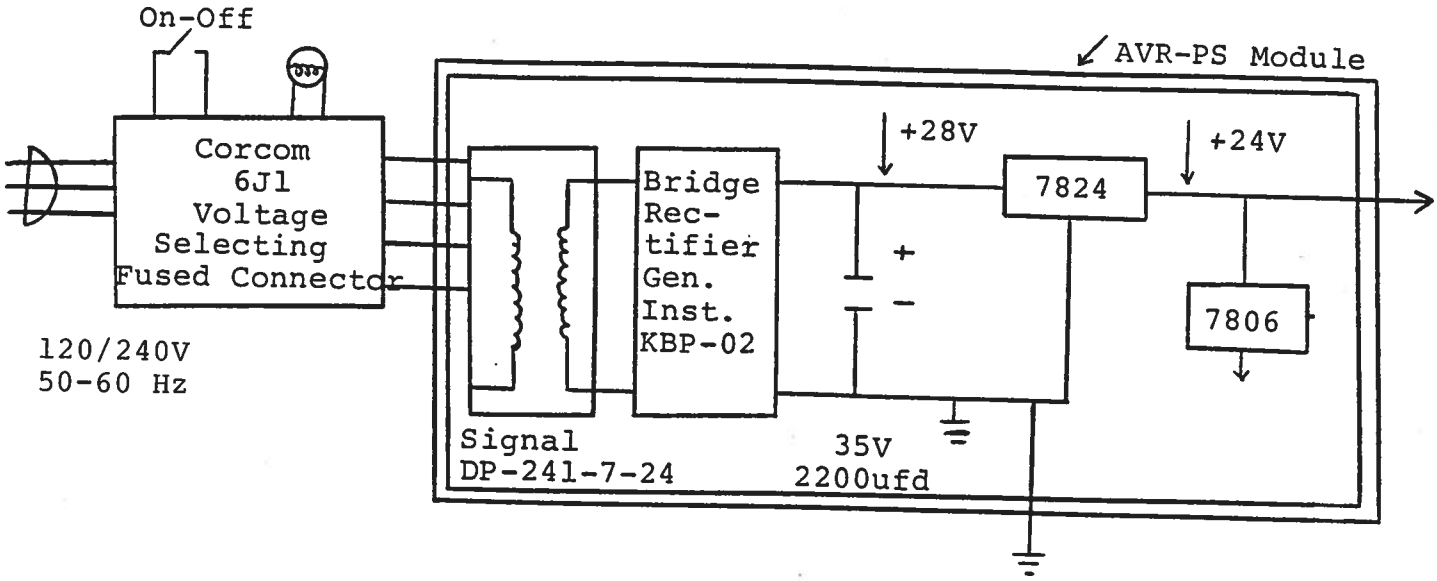

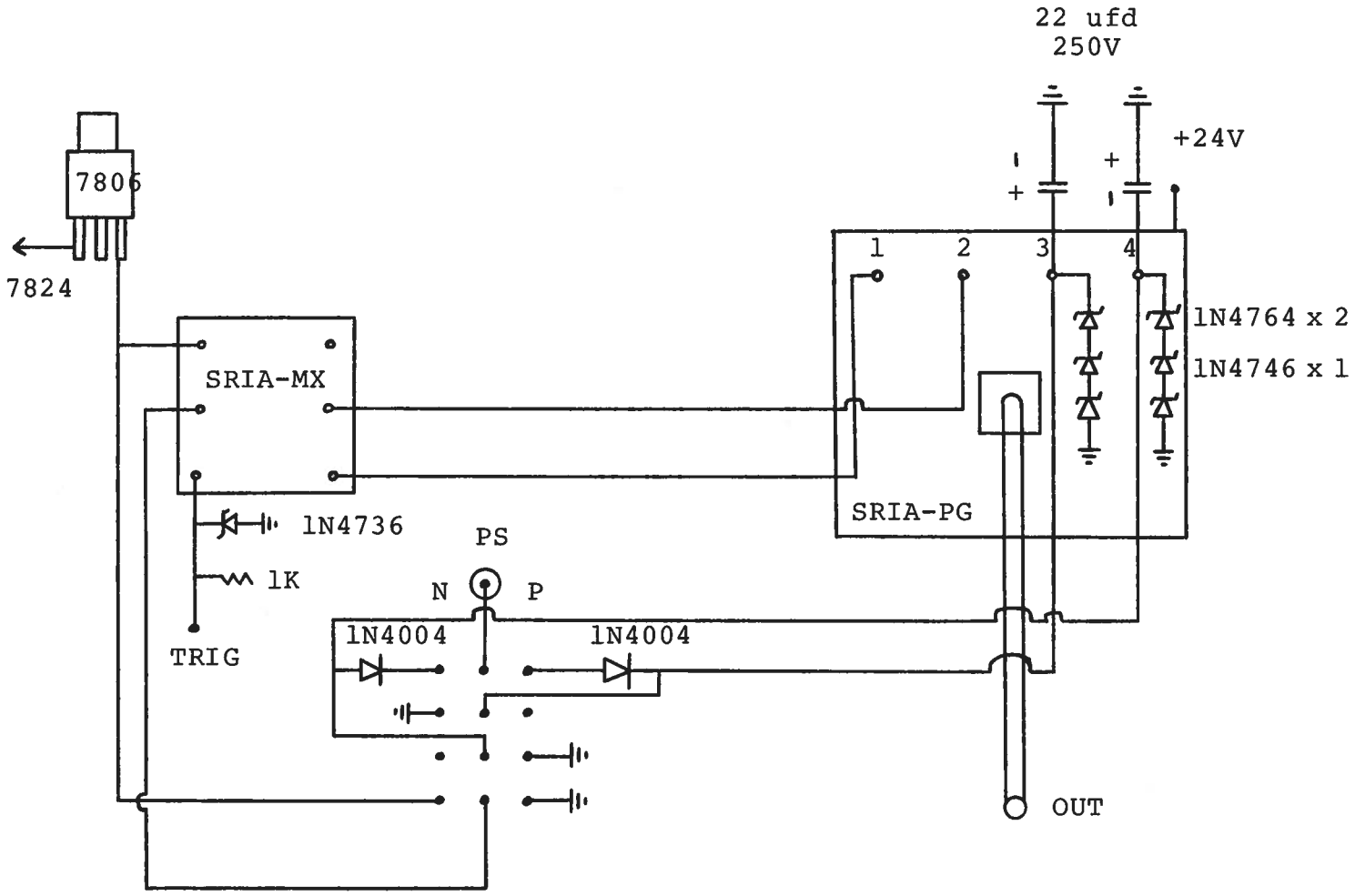

AVR-3-PN-SRIA BLOCK DIAGRAM

SYSTEM DESCRIPTION AND REPAIR PROCEDURE

The AVR-3-PS-SRIA consists of the following basic modules:

1) AVR-3-SRIA-PG pulse generator module
2) +24V power supply board
3) SRIA-MX polarity control module

The modules are interconnected as shown in Fig. 4

In the event of an instrument malfunction, it is most likely that the rear panel 0.25A SB fuse or some of the output switching elements (SL4T) may have failed due to an output short circuit condition or to a high duty cycle condition. The switching elements may be accessed by removing the cover plate on the bottom side of the instrument. NOTE: First turn off the prime power. The elements may be removed from their sockets by means of a needle nosed pliers. The SL4T is a selected VMOS power transistor in a TO 220 packages and may be checked on a curve tracer. If defective, replacement units should be ordered directly from Avtech. When replacing the SL4T switching elements, take care to insure that the short lead (of the three leads) is adjacent to the black dot on the chassis. If the switching elements are not defective, then the four Phillips screws on the back panel should be removed. The top cover may then be slid off and operation of the power supply modules should be checked.

The power supply board generates +24V DC to power the other modules. If the voltage is less than +24V, turn off the prime power and unsolder the lead from the 7824 regulator chip on the power supply board. Solder a 100 ohm 5 watt resistor to the 7824 output to ground and turn on the prime power. A voltage of +24 volts should be read. If the voltage is less then the power supply board is defective and should be repaired or replaced.

Schroff 10.09.92